RED SWASTIKA SCHOOL
MATHEMATICS
PRIMARY 6
CLASS TEST (1)

35

Name: _____ ( ) **Date:** **23 February 2024**

Class: Pr 6 / _____ **Duration:** **45 minutes**
(Use of calculators is not allowed)

Parent's Signature: _____

Section A

Questions **1** to **2** carry 1 mark each. Questions **3** to **5** carry 2 marks each. For each question, four options are given. One of them is the correct answer. Make your choice (1, 2, 3 or 4) and shade your answer in the Optical Answer Sheet. (8 marks)

---

1 Express $7\frac{1}{20}$ as a decimal.

(1) 7.1
(2) 7.5
(3) 7.05
(4) 7.12 ( )

2 Four figures are shown on the square grid.

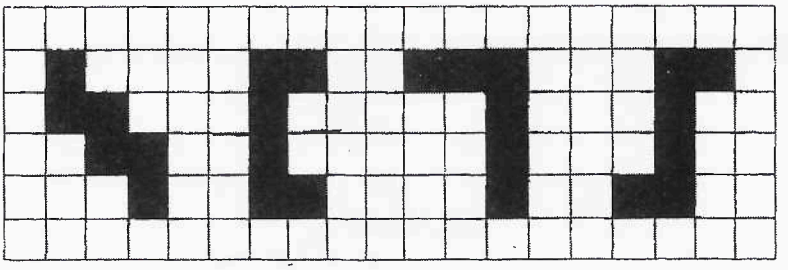

How many figure(s) has/have a line of symmetry?

(1) 1
(2) 2
(3) 3
(4) 4 ( )

2

3 Which of the following mixed numbers is closest to $6\frac{1}{2}$?

(1) $5\frac{1}{6}$

(2) $5\frac{3}{8}$

(3) $7\frac{3}{4}$

(4) $7\frac{2}{3}$

4 ABC is a straight line, BCD is an isosceles triangle and DB = DC.

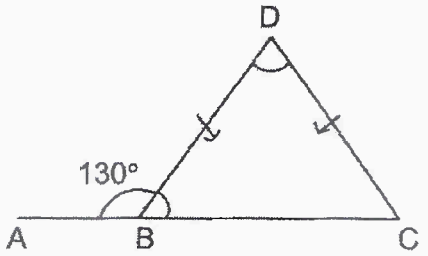

Find ∠BDC.

(1) 25°

(2) 50°

(3) 65°

(4) 80°

5 An equilateral triangle is formed by 3 straight lines as shown.

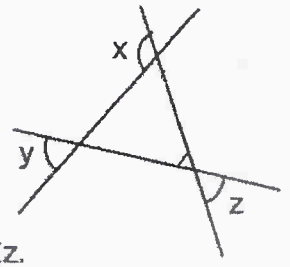

Find the sum of ∠x, ∠y and ∠z.

(1) 180°

(2) 240°

(3) 300°

(4) 360°

6

Section B

Questions **6** to **13** carry 2 marks each. Show your working clearly and write your answers in the space provided. For questions which require units, give your answers in the units stated.

(16 marks)

---

6 (a) Find the value of $1 - \frac{1}{6} - \frac{3}{4}$

Ans: (a) _____

(b) Find the value of $\frac{2}{9} \div 6$.

Ans: (b) _____

---

7 Mrs Tan took $\frac{3}{8}$ h to sew a cushion and $\frac{7}{8}$ h to sew a dress.

(a) How long would she take to sew 2 such cushions?
Leave your answer as a fraction in hours.

Ans: (a) _____ h

(b) Mdm Aminah took $\frac{1}{2}$ of the time Mrs Tan took to sew a dress. How long did Mdm Aminah take to sew a dress? Leave your answer as a fraction in hours.

Ans: (b) _____ h

4

8 Dave drew a triangle EFG in a square grid as shown.

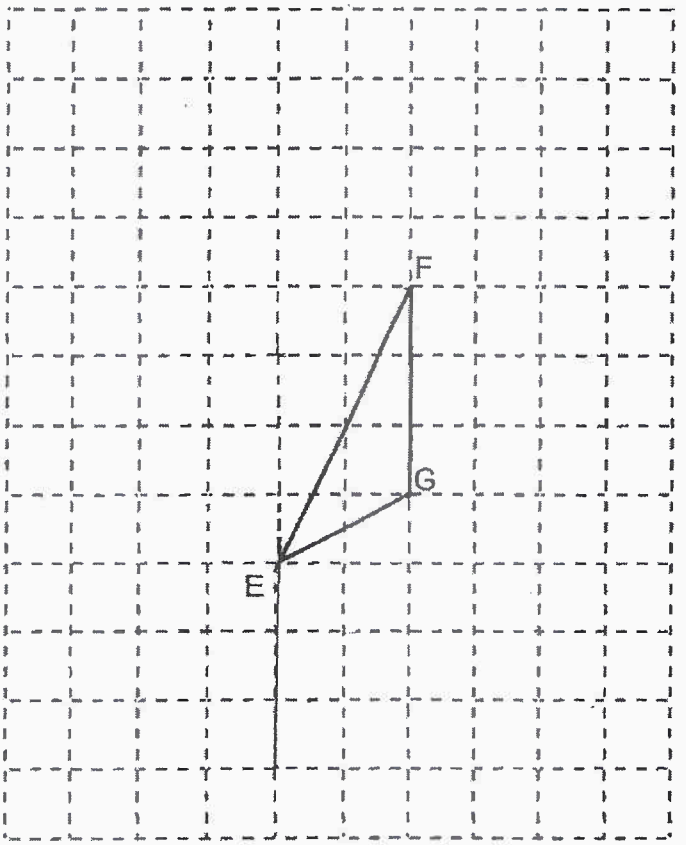

(a) Measure and write down the size of the smallest angle in the triangle.

Ans: (a) _____ °

(b) Complete the diagram above by adding two more lines to form a parallogram EFGH on the grid.

2

9 In the figure, ABCD is a rhombus and BFEC is a square.

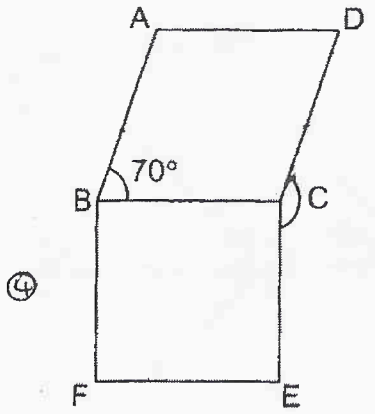

(a) How many pair(s) of parallel lines are there in the figure?

Ans: (a) _____

(b) Find ∠ECD.

Ans: (b) _____ °

---

10 Mr Devi had $\frac{7}{9}$ m of ribbon. He cut the ribbon into smaller pieces of $\frac{1}{6}$ m each. Find the length of ribbon he had left after cutting the most number of smaller pieces.

Ans: _____ m

4

11 ABCD is a trapezium, DEFG is a rectangle and BEC is a straight line.

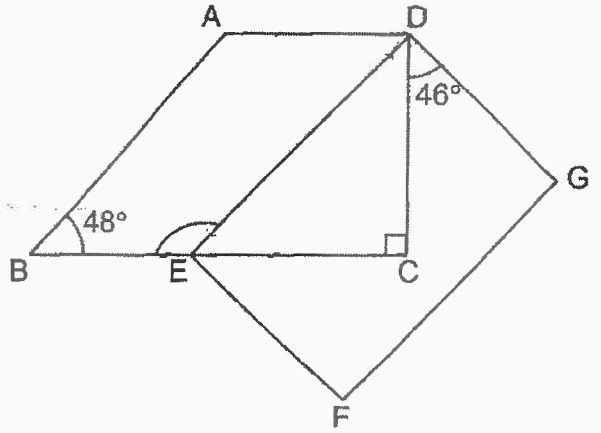

(a) Find ∠BED.

Ans: _____ °

(b) Circle the words that describe ABED correctly in the following statement:

As AD (**is** / **is not**) parallel to BE and AB (**is** / **is not**) parallel to DE, ABED (**is** / **is not**) a parallelogram.

---

12 The figure PQRS is formed by two identical rectangles, PQTU and UTRS. Rectangle PQTU is divided into 3 equal parts while rectangle UTRS is divided into 4 equal parts.

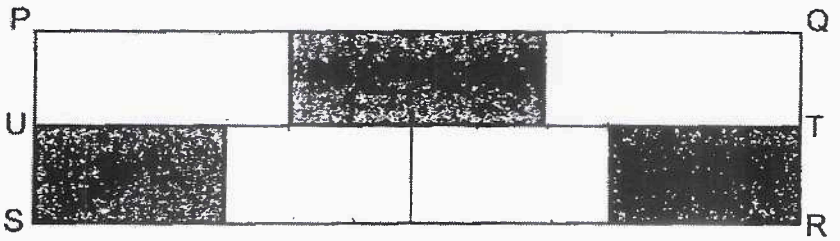

What fraction of the figure PQRS is shaded?

Ans: _____

4

13 In the figure, JKL and JKM are triangles.

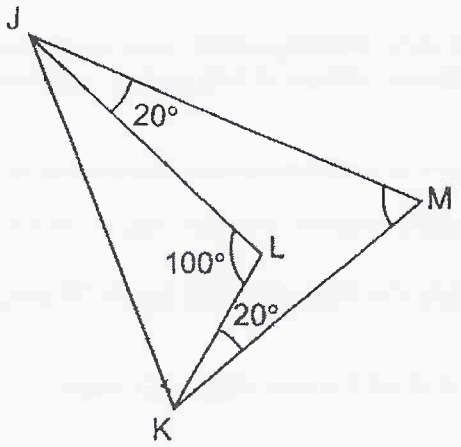

Find ∠ JMK.

Ans: _____ °

2

Section C

For questions **14** to **16**, show your working clearly and write your answers in the space provided. The number of marks available is shown in brackets [ ] at the end of each question.

(11 marks)

---

14 Siti and Bala made bookmarks over two days. On Monday, Siti made 14 more bookmarks than Bala. On Tuesday, Siti made 16 bookmarks and Bala made 22 bookmarks. At the end of the two days, Siti made $\frac{4}{7}$ of the total number of bookmarks.

(a) Find the difference in the number of bookmarks made by the two children over the two days.

Ans: (a) _____ [1]

(b) What was the total number of bookmarks Bala made?

Ans: (b) _____ [2]

3

15 Eunice has a triangular piece of paper. She folded it along the dotted lines such that AB is parallel to CD as shown below.

Before folding

After folding

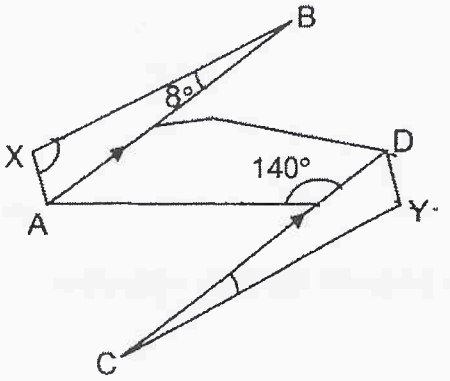

(a) Find ∠DCY.

Ans: (a) _____ [1]

(b) Find ∠AXB.

Ans: (b) _____ [3]

4

16 Ken spent $\frac{1}{5}$ of his money on 2 files and 9 pens. The cost of each file is 3 times the cost of each pen. He bought some more pens with $\frac{2}{3}$ of the remaining money.

(a) What fraction of the money had he left in the end?

Ans: (a) _____ [1]

(b) How many pens did Ken buy altogether?

Ans: (b) _____ [2]

(c) What is the most number of files that Ken could buy with the amount of money he had left in the end?

Ans: (c) _____ [1]

End of Paper

SCHOOL : RED SWASTIKA SCHOOL
LEVEL : PRIMARY 6
SUBJECT : MATH
TERM : WA1 2024

Q 1	Q2	Q3	Q4	Q5
3	1	2	4	2

Q6)	a) $\frac{1}{12}$ b) $\frac{1}{27}$
Q7)	a) $\frac{6}{8}h$ b) $\frac{7}{16}h$
Q8)	a) 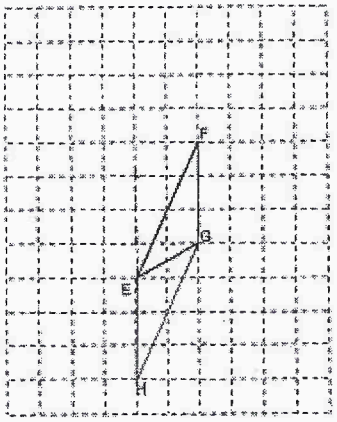 b)26°
Q9)	a)5 b)70 + 70 = 140 360 – 140 = 220 220 ÷ 2 = 110 110 + 90 = 200 360 – 200 = 160°

Q10)	$\frac{1}{9}$
Q11)	a)90 – 46 = 44 90 + 44 = 134 180 – 134 = 46 180 – 46 = 134° b)is / is not / is not
Q12)	$\frac{10}{24}$
Q13)	180 – 100 = 80 20 + 20 = 40 180 – 40 = 140 140 – 80 = 60°

Section C

For questions **14** to **16**, show your working clearly and write your answers in the space provided. The number of marks available is shown in brackets [ ] at the end of each question.

(11 marks)

---

14 Siti and Bala made bookmarks over two days. On Monday, Siti made 14 more bookmarks than Bala. On Tuesday, Siti made 16 bookmarks and Bala made 22 bookmarks. At the end of the two days, Siti made $\frac{4}{7}$ of the total number of bookmarks.

(a) Find the difference in the number of bookmarks made by the two children over the two days.

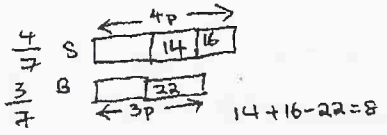

14 + 16 − 22 = 8

Ans: (a) 8 [1]

(b) What was the total number of bookmarks Bala made?

1p → 8
8 × 3 = 24

Ans: (b) 24 [2]

15 Eunice has a triangular piece of paper. She folded it along the dotted lines such that AB is parallel to CD as shown below.

Before folding

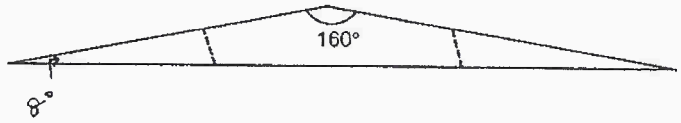

After folding

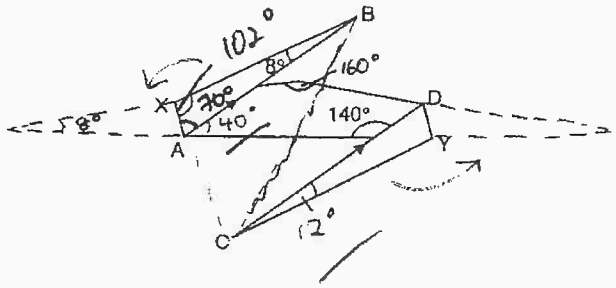

(a) Find ∠DCY.

160 + 8 = 168
180 − 168 = 12

Ans: (a) 12° [1]

(b) Find ∠AXB.

180 − 140 = 40
$\frac{180-40}{2}$ = 70
~~180 − 102 = 70~~
180 − 70 − 8 = 102

Ans: (b) 102° ~~70°~~ [3]

BP~65

16 Ken spent $\frac{1}{5}$ of his money on 2 files and 9 pens. The cost of each file is 3 times the cost of each pen. He bought some more pens with $\frac{2}{3}$ of the remaining money.

(a) What fraction of the money had he left in the end?

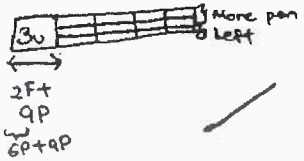

1F = 3P
2F = 6P

Ans: (a) $\frac{4}{15}$ [1]

(b) How many pens did Ken buy altogether?

3u = 6+9 = 15 (pens)
1u = 15÷3 = 5
8u = 5×8 = 40
40+9 = 49

Ans: (b) 49 [2]

(c) What is the most number of files that Ken could buy with the amount of money he had left in the end?

1u = 5 (pen)
4u = 5×4
20÷3 ≈ 6

Ans: (c) 6 [1]

End of Paper